CT inspection report

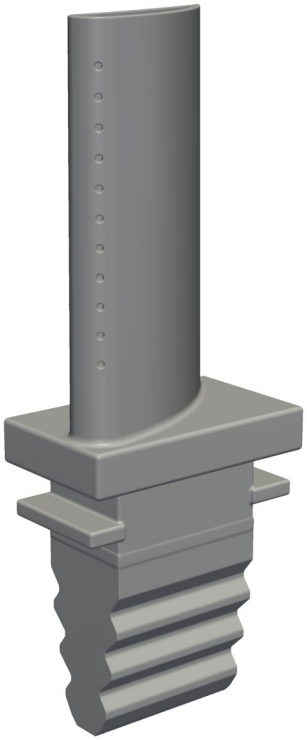

Revision	Date	Document change history
A	03/11/26	Document creation (website case study)
B	12/11/26	Reformatted as an ARIX inspection report, results unchanged
C	24/11/26	Results recomputed on the new demonstration geometry (blade designed by ARIX)

Staff	Author – X-ray CT expert	Approval – ARIX Manager
Name Signature	Olivier Guiraud	

This document is the property of ARIX. Any reproduction or disclosure to third parties without prior authorisation is prohibited. Demonstration case study: the acquisition, the CT volume, the pores and the shape defects are numerically simulated from the CAD model of the part. They do not describe a real part and do not validate the performance of an instrument.

Purpose of the document

This report presents the ARIX case study: the X-ray CT inspection of a turbine blade, from acquisition to the analysis of porosity, under-thickness, penetrated thickness and deviation from CAD.

Its input is the nominal CAD model of the part; the acquisition, the volume and the defects are numerically simulated from this CAD model.

It comes with the deliverables listed in Table 3 and gives no conformity statement, as no tolerance is defined for this demonstration part.

1 Summary

The inspection and the part are summarised in Table 1.

Customer	Not applicable (ARIX case study)
Order	Not applicable
Part description	Turbine blade
Part reference	Demonstration CAD model
Serial / batch number	Not applicable (digital part)
Part number	Not applicable
Material	Not specified (demonstration part)
Inspection stage	Not applicable
Region of interest	Whole part, from the fir-tree root to the blade tip
Applicable documents	Nominal CAD model of the part
Conformity	NOT STATED: no tolerance defined (see Table 8)

Table 1 – *Summary of the part, the inspection and its conformity.*

Operator certifications are given in Table 2.

Operator	Certification	Valid until
Not applicable (numerically simulated acquisition)	–	–

Table 2 – *Operator certification.*

The deliverables provided by ARIX are listed in Table 3.

Deliverable	Content	Format
Inspection report	This document	PDF
CT volume	1122 slices, 16 bits per voxel, CAD coordinate system	TIFF stack
Measurement tables	Measurements per pore, centroids, bounding boxes, principal orientations	CSV
Defect meshes	Surface of each detected pore	STL
Analysis maps	Maximum penetrated thickness and deviation from CAD	TIFF, CSV
Interactive 3D viewer	Selectable studies, X, Y and Z slices, data sheet for each pore	Online access

Table 3 – *Deliverables provided to the customer.*

The main results of the inspection are as follows.

- The part is inspected over its whole volume, with an isotropic voxel size of 90 µm.
- Porosity: 15 internal pores, volume fraction of 0.062 %, largest pore 3.72 mm.
- Under-thickness: none; smallest ligament 0.96 mm to the surface and 0.66 mm between two pores, for a demonstration threshold of 0.5 mm.
- Maximum penetrated material thickness: 42.1 mm.
- Deviation from nominal CAD: from −0.23 to +0.23 mm; 24.6 % of the surface outside ±0.05 mm.
- Conformity: not stated, as no tolerance is defined.

2 Materials and methods

The part is inspected by X-ray CT over its whole volume: it rotates between the X-ray source and the detector, a radiograph is recorded at each angular position, then the 3D volume is reconstructed, segmented and analysed. The acquisition, reconstruction and analysis parameters are part of the expertise of the ARIX teams and are not disclosed in this report. For this case study, the acquisition, the volume and the pores are numerically simulated from the CAD model, and the "measured" part compared with the nominal CAD is a simulated deformed CAD model (bending and twist of the blade, local bump, dip on the platform, slight shrinkage of the root). The delivered volume has the characteristics given in Table 4.

Characteristic	Value
Volume dimensions (Z × Y × X)	1122 × 512 × 512 voxels
Voxel size	90 µm, isotropic
Encoding	16 bits per voxel; TIFF stack of 1122 slices
Coordinate system	CAD coordinate system, in millimetres
Lightweight version for the online viewer	561 × 256 × 256 voxels of 180 µm, 8 bits

Table 4 – *Characteristics of the delivered CT volume.*

The quantities used in the results are defined in Table 5.

Quantity	Definition
Pore	Internal cavity isolated in the segmented volume; the pores of this part are shrinkage cavities
Maximum dimension	Largest distance between two points of the wall of a pore
Equivalent diameter	Diameter of the sphere with the same volume as the pore
Sphericity	Shape index: 1 for a perfect sphere, lower for an irregular shape
Distance to surface	Shortest distance between the wall of the pore and the free surface of the part
Ligament	Thickness of sound material between a pore and the surface, or between two neighbouring pores
Under-thickness threshold	Minimum allowed ligament, set to 0.5 mm for this demonstration
Maximum penetrated thickness	Longest path of material crossed by an X-ray passing through the point considered, over a full rotation of the part about its vertical axis; cavities and internal channels are not counted
Deviation from CAD	Signed distance between the measured surface and the closest point of the nominal CAD, positive where there is excess material

Table 5 – *Definition of the reported quantities.*

3 Results

This chapter presents the measurement findings, in the order of the analysis chain.

3.1 Reconstructed volume

Figure 1 shows the reconstructed volume in three orthogonal slices and in a 3D view.

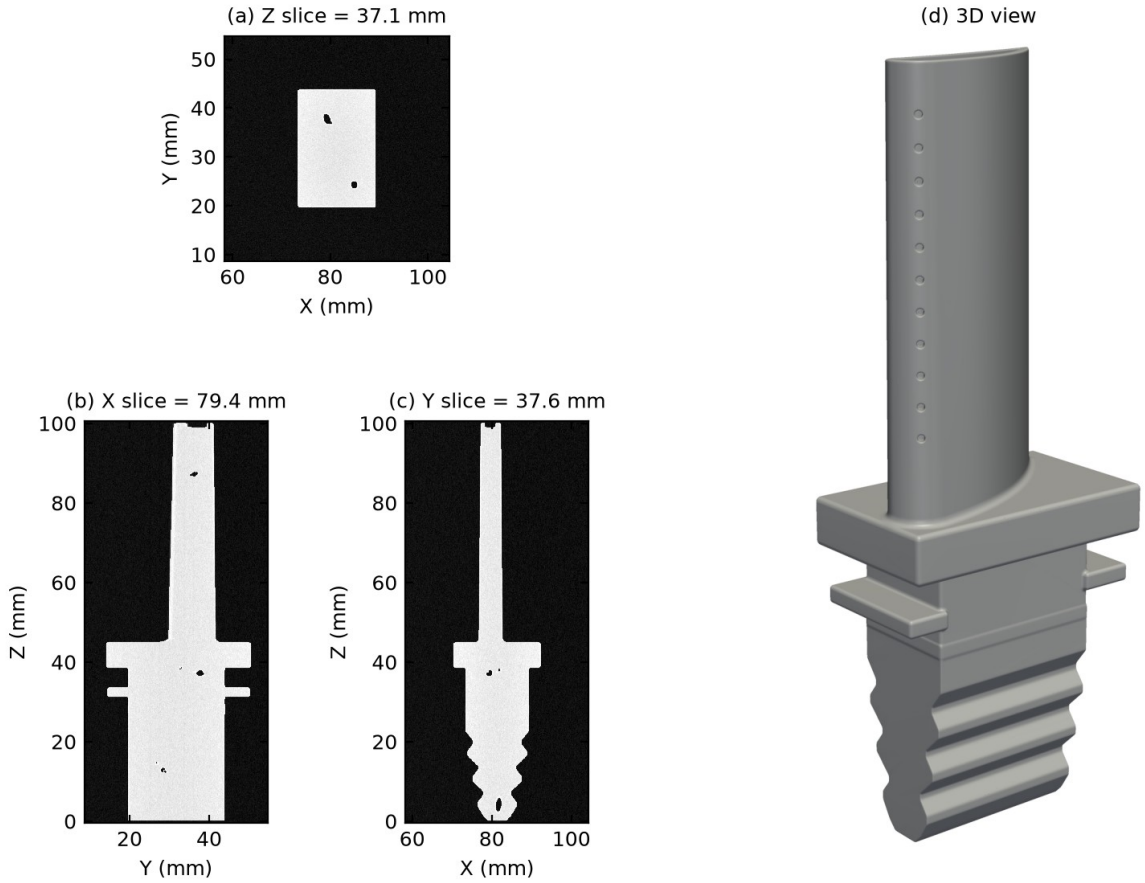

Figure 1 – *Simulated volume: (a) Z slice, (b) X slice, (c) Y slice, (d) 3D view of the part. In the slices, material appears light grey, air black and internal cavities as dark spots.*

3.2 Porosity

The analysis detects 15 internal pores, for a porosity volume fraction of 0.062 % (Table 6). Their position in the part is shown in Figure 2.

Indicator	Value
Connected pores detected	15
Total pore volume	16.9 mm³
Material volume	27,189 mm³
Porosity volume fraction	0.062 %
Equivalent diameter (min / median / max)	0.82 / 1.27 / 1.70 mm
Maximum dimension (min / median / max)	1.33 / 2.20 / 3.72 mm
Mean sphericity	0.69
Minimum distance to surface	0.96 mm
Smallest distance between two pores	0.66 mm

Table 6 – *Global porosity indicators over the whole part.*

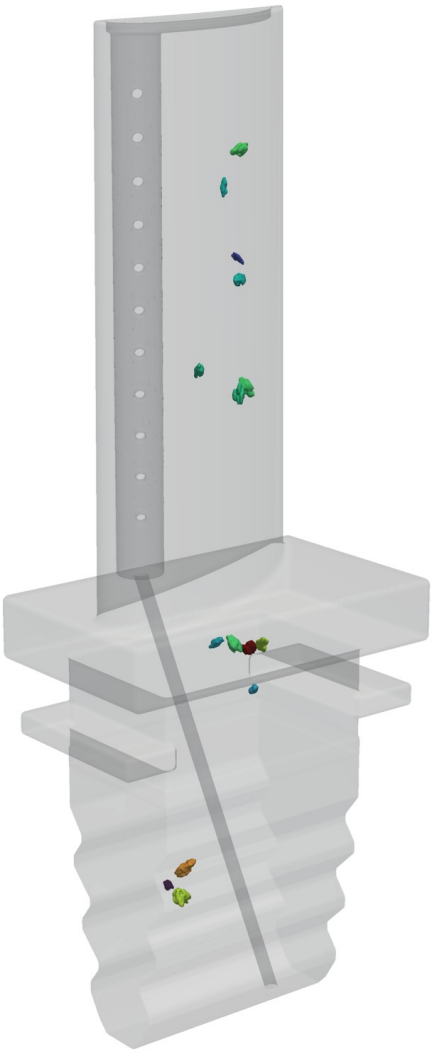

Figure 2 – *3D view of the transparent part with the 15 detected pores. Colour encodes the maximum dimension of each pore, from 1.33 mm (purple) to 3.72 mm (red).*

Individual measurements are detailed in Appendix A (Table A1). The largest pore, No. 1, reaches a maximum dimension of 3.72 mm for an equivalent diameter of 1.70 mm. Sphericity ranges from 0.49 to 0.74, with a mean of 0.69; these irregular shapes are typical of shrinkage cavities. Figure 3 shows the distribution of these quantities.

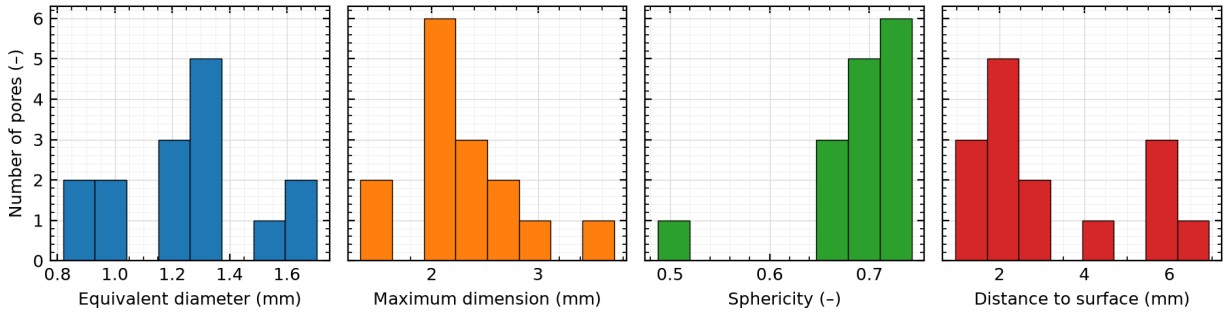

Figure 3 – *Histograms of the four morphometric quantities of the 15 pores: equivalent diameter, maximum dimension, sphericity and distance to surface.*

3.3 Under-thickness

No pore has a ligament below the 0.5 mm threshold (Figure 4). The smallest ligament to the surface is 0.96 mm, for pore No. 8; the smallest ligament between two pores is 0.66 mm, between pores No. 4 and 10. The minimum margin to the threshold is 0.16 mm.

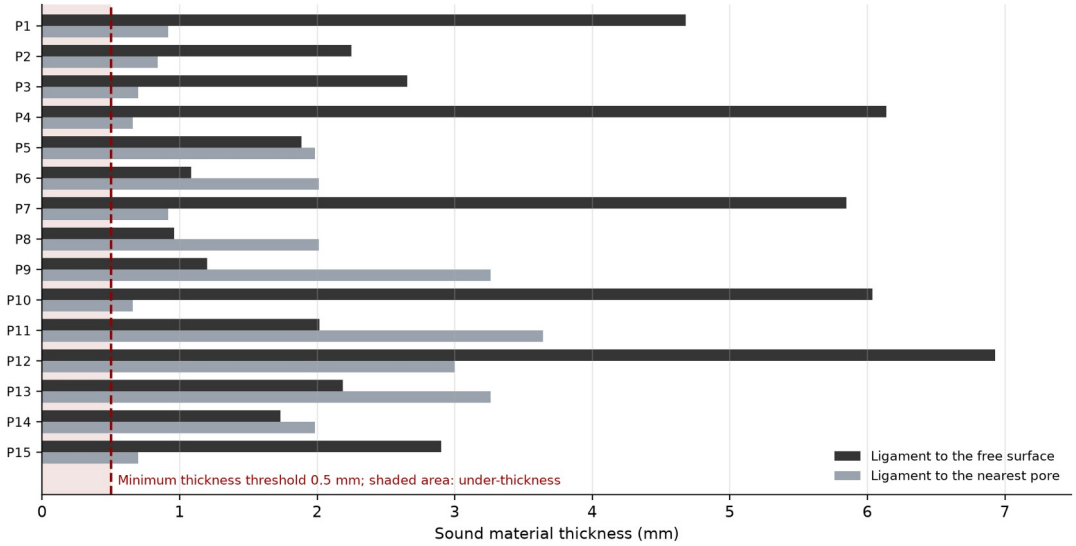

Figure 4 – *Ligament around each pore P1 to P15: to the free surface (black bars) and to the nearest pore (grey bars). The red line marks the 0.5 mm threshold.*

3.4 Penetrated thickness

The maximum penetrated material thickness reaches 42.1 mm, with a mean of 30.5 mm over the material (Figure 5). Its distribution is given in Figure 6.

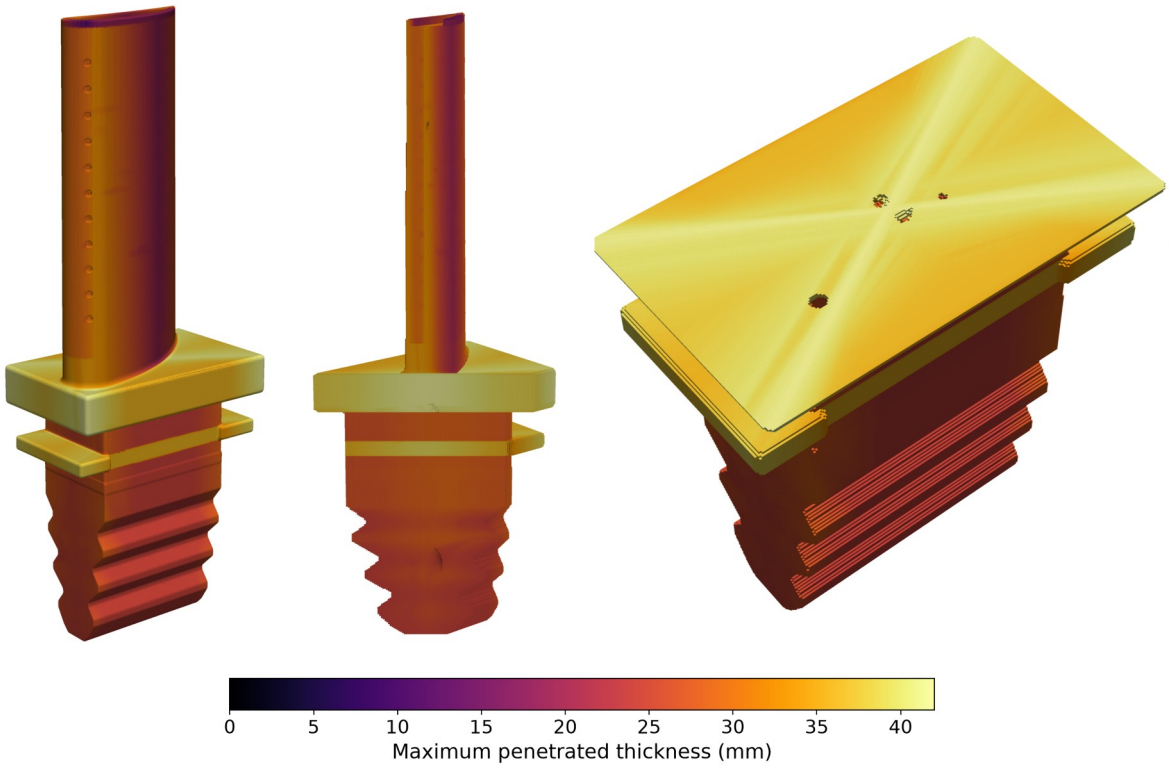

Figure 5 – *Map of the maximum penetrated material thickness (mm): surface of the part (left), longitudinal section (centre) and axial section at Z = 39 mm (right).*

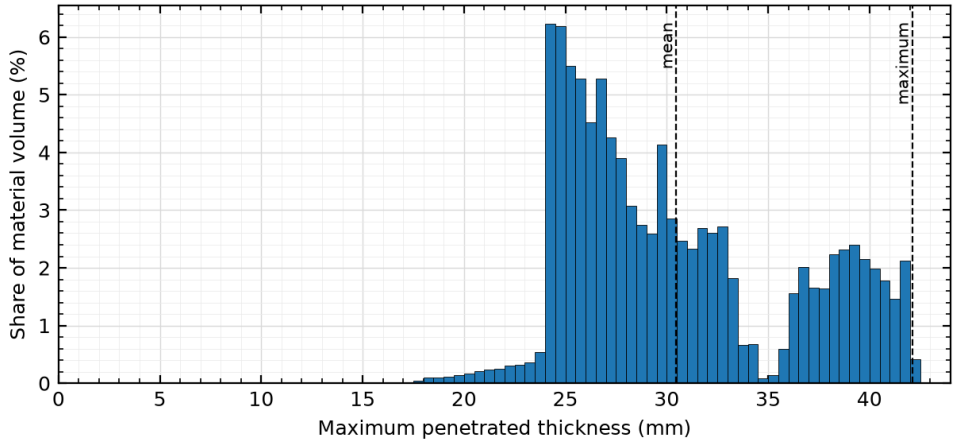

Figure 6 – *Histogram of the maximum penetrated thickness over the material volume. Dashed lines mark the mean and the maximum.*

3.5 Deviation from nominal CAD

The measured surface deviates from the nominal CAD by −0.226 mm to +0.230 mm, with a mean absolute deviation of 0.034 mm (Table 7, Figure 7). In total, 24.6 % of the surface lies outside the ±0.05 mm band (Figure 8).

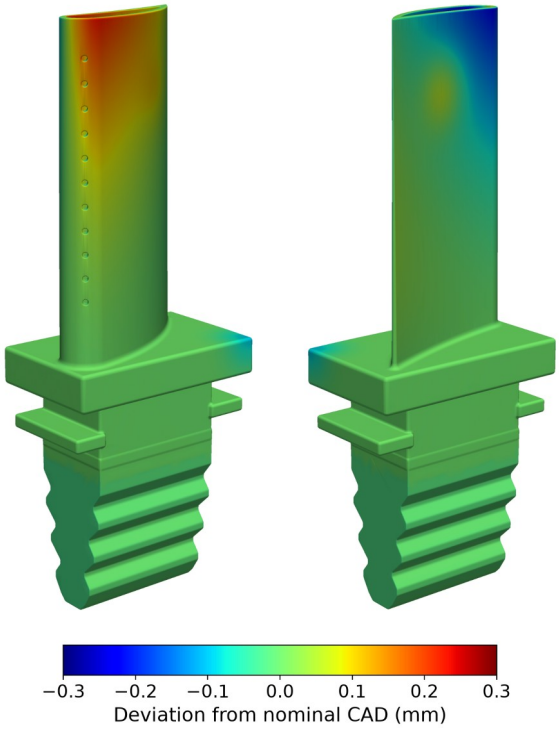

Figure 7 – *Signed deviation of the measured surface from the nominal CAD (mm), seen from two angles. Blue indicates missing material, red excess material.*

Min. deviation	Max. deviation	Mean absolute deviation	Surface outside ±0.05 mm
−0.226 mm	+0.230 mm	0.034 mm	24.6 %

Table 7 – *Statistics of the deviation from nominal CAD over the whole surface.*

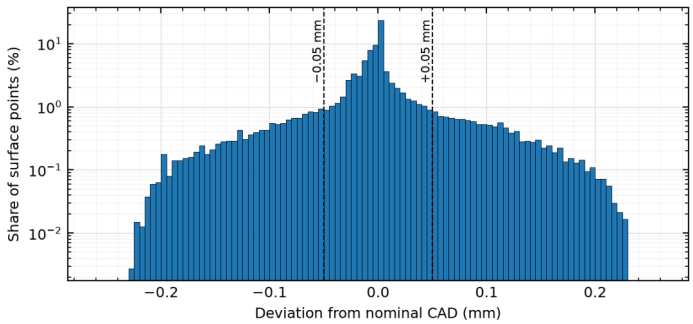

Figure 8 – *Histogram of the signed deviation from nominal CAD over the surface points, on a logarithmic scale. Dashed lines mark the ±0.05 mm band.*

4 Discussion

4.1 Conformity to criteria

No tolerance is defined for this demonstration part: no conformity decision is given. Only the 0.5 mm under-thickness threshold, set for the demonstration, allows a comparison; it is met. Table 8 lists the measured values that would be compared with the specification criteria of a real part.

Criterion	Requirement	Measured value	Verdict
Porosity volume fraction	Not defined	0.062 %	Not applicable
Maximum dimension of a pore	Not defined	3.72 mm (No. 1)	Not applicable
Ligament to the surface	≥ 0.5 mm (demonstration)	0.96 mm (No. 8)	Threshold met
Ligament between two pores	≥ 0.5 mm (demonstration)	0.66 mm (No. 4–10)	Threshold met
Shape deviation from CAD	Not defined	−0.226 / +0.230 mm	Not applicable

Table 8 – *Measured quantities against acceptance criteria; apart from the demonstration under-thickness threshold, no criterion is defined for this case study.*

4.2 Limitations and reservations

The data in this report are numerically simulated: they illustrate the deliverables of a service, without describing a real part or validating the performance of an instrument. The 0.5 mm under-thickness threshold is set for this demonstration; for a real part, it derives from the specification or from a mechanical strength calculation. The measured quantities are also limited by the resolution of the volume.

5 Conclusion

The case study presents, on a turbine blade, the complete chain of an X-ray CT inspection: grey-level volume, porosity study, under-thickness search, penetrated-thickness map and comparison with the nominal CAD. The analysis reveals 15 pores, for a volume fraction of 0.062 %, no under-thickness area at the 0.5 mm threshold, a maximum penetrated thickness of 42.1 mm and deviations from CAD between −0.23 and +0.23 mm. The conformity decision depends on the specification of each part.

Appendix A Individual pore measurements

No.	Max. dim. (mm)	deq (mm)	V (mm³)	Ψ (–)	Dist. to surface (mm)	Height Z (mm)
1	3.716	1.704	2.590	0.680	4.680	37.1
2	2.608	1.603	2.155	0.488	2.250	12.8
3	2.994	1.578	2.059	0.719	2.656	16.2
4	2.296	1.361	1.321	0.698	6.138	39.1
5	2.044	1.281	1.102	0.718	1.886	74.9
6	2.293	1.270	1.072	0.713	1.083	64.6
7	2.591	1.269	1.070	0.665	5.848	38.3
8	2.197	1.267	1.064	0.668	0.960	64.6
9	2.309	1.251	1.026	0.649	1.199	87.1
10	1.978	1.214	0.936	0.736	6.036	38.8
11	2.175	1.177	0.853	0.682	2.017	67.2
12	1.932	1.010	0.539	0.734	6.930	33.5
13	2.038	0.970	0.478	0.695	2.187	84.1
14	1.548	0.868	0.342	0.690	1.732	77.3
15	1.329	0.819	0.288	0.742	2.902	14.4

Table A1 – *Individual measurements of the 15 pores, numbered by decreasing volume. deq: equivalent diameter; V: volume; Ψ: sphericity; Z: height of the centroid.*